Development Permit Checklist

(Building Permit)

Starting the Application Process…

- ☐ **Development Permit Application & Fee ($40)**
  (Submit to Town of Cornwall)

- ☐ **Sewer & Water Application**
  (Submit to Town of Cornwall)

- ☐ **Submit Entranceway Application Permit *(if required)***
  (Submit to Government, 3rd Floor Jones Building)

- ☐ **Submit Full Set of Building Plans** (Paper & PDF Copy)
  (Submit to Town of Cornwall)

- ☐ **Submit Lot Grading Plan** signed by Certified Surveyor
  (Submit to Town of Cornwall)

- ☐ **Authorization for Property Owners Agent *(if applicable)***
  signed by Registered Property Owner
  (Submit to Town of Cornwall)

- ☐ **Submit Final Driveway Entranceway Payment *(if applicable)***
  (Submit to Province of PEI – 3rd Floor Jones Building)

Once Permit is Issued…

- ☐ **Sign Development Permit & Make Payment**
  (Submit to Town of Cornwall)

- ☐ **Payment for Sewer & Water ($35)**
  (Submit to Town of Cornwall)

Once Footings are Poured…

- ☐ **Submit Footing Certificate** signed by Certified Surveyor
  (Submit to Town of Cornwall)

- ☐ **Sewer & Water Hookup Request** **24 Hours Notice Required*
  (Only once the Footing Plan is submitted, can the water & Sewer be hooked up)

Town of Cornwall
so much to offer...

Permit #: _____
Permit Fee: _____

TOWN OF CORNWALL
P.O. BOX 430
CORNWALL, PEI
C0A 1H0 (902)566-2354

Date Received: _____
Application Fee Paid: ☐ **Yes** ☐ **No**
Receipt #: _____
Building Plan: ☐ **Yes** ☐ **No**
Site Plan: ☐ **Yes** ☐ **No**
W&S Inspection Form: ☐ **Yes** ☐ **No**

DEVELOPMENT PERMIT APPLICATION

Required fields are shown with an asterisk (*).

1. Name and address of applicant:

Applicant*..... Telephone No.*……
Street Address*..... Email Address*.....
Mailing Address*……
Property Owner*..... Phone*…….
Contractor (if applicable)*…….Phone*..……
Architect/Engineer (if applicable)*……..……..…. Phone*…..……

2. Location and size of property on which the proposed development will occur:

Subdivision ……..…..... Subdivision Lot No……..... Property Tax No.*….....
Project Location: (Street No.)*…….....…..... (Street name)*.....
Cornwall Development Zone* …..... Area of property*..... (sq. ft. / sq. m.)
Are there any existing structures on the property?* ☐ No ☐ Yes, describe:……

3. Category of Proposed Development*: Check (☐) type of development and complete the appropriate section*:

☐ Dwelling (see #4) ☐ Detached Garage (see #5) ☐ Accessory Building (see #5) ☐ Fence (see #6)
☐ Deck (see #7) ☐ Pool (see #8) ☐ Other (please describe …….)

Type of Development*:

☐ new construction ☐ repair or re-modeling ☐ moved to site ☐ demolition ☐ change of use

NOTE: Any development that requires a new access to a street must first apply for a Driveway Permit from the Department of Transportation & Infrastructure and Energy.

4. Description of Proposed Dwelling Development (Please attach site plan & see #9, #10 & #11):

☐ Single Family Dwelling ☐ Duplex ☐ Semi-detached ☐ Multi-Family Dwelling ☐ Commercial/Industrial ☐ Addition

Road frontage of property ……..... (ft /m) Property depth ..... (ft /m)
Number of stories..... Total height to peak of roof ..... (ft/m)
Ground floor: Maximum length ..... (ft/m) Maximum width ..... (ft/m) Ground floor area ……. (ft^2/m^2)
Total dwelling floor area ..... (ft^2/m^2) Number of bedrooms …… Number of bathrooms ……
Total number of units…….. Total number of parking spaces ……
Attached garage? ☐ Yes ☐ No If Yes: Floor area ……..(ft^2/m^2)
Deck/ Patio? ☐ Yes ☐ No If Yes: No. of Decks/Patio …… Length ..... (ft/m) Width ..... (ft/m)

5. Description of Proposed Accessory Building Development (Please attach site plan & see #9 & #10):

Number of stories..... Total height to peak of roof…….. (ft/m)
Dimensions: Length ..... (ft/m) Width ..... (ft/m) Total area ..... (ft^2/m^2)

6. Description of Proposed Fence Development (Please attach site plan & see #9 & #10):

Height of Fence ..... (ft/m)

7. **Description of Proposed Deck Development (Please attach site plan & see #9 & #10):**
Length ..... (ft/m) Width ..... (ft/m) Total Area …… (ft^2/m^2) Height Above Grade ..... (ft/m)

8. **Description of Proposed Pool Development (Please attach site plan & see #9 & #10):**
☐ Permanent ☐ Seasonal
Dimensions: {Length ..... (ft/m) x Width ..... (ft/m)} or {Diameter ..... (ft/m)} Wall Height ..... (ft/m)

9. **Estimated Cost*** $.....

10. **Anticipated Start & Completion Dates*** …….

11. **Water Supply*** ☐ Private ☐ Municipal **Sewage System*** ☐ Private ☐ Municipal

NOTE*: *If water and/or sewage systems are private systems, applicant must first contact a registered sewer installer to begin process to secure permits from the Department of Communities, Land & Environment.

Note: Additional information may be required depending on the proposed development and may include: Site Plan, Survey plan, Building plans, Grading plans, Construction Plan, Drainage Plan, Footing Plan and any other information the Authority Having Jurisdiction deems pertinent to determine whether the proposed development conforms with the requirements of Town Bylaws.

I solemnly declare:

1) That I am the property owner or the authorized agent of the property owner named in the application hereto attached and I certify that I have the authority to sign this application and bind the property owner.
2) The plans/information herein contained in this application are true and reasonable efforts were made to ensure the accuracy of the data.
3) I waive all rights or actions against the Town of Cornwall and/or its agents or employees in respect of any damages which may be caused through the operation of any provisions of its Bylaws or the revoking of a permit for any cause or irregularity or nonconformity with the Bylaws or regulations adopted by the Town of Cornwall.
4) I assume responsibility for damage to sidewalks, curbs, streets or other infrastructure and will bear the cost of repair or replacement to the satisfaction of the Town of Cornwall.
5) Where services are available, properties must be serviced by municipal sewer and water in accordance with the Town of Cornwall Water and Sewer Utility Corporation minimum standards of acceptability for water and sewer connections. I am responsible for all costs incurred with the connections.
6) Once the Development Permit has been issued, an application for connection to sewer and water shall be submitted to the Town of Cornwall (where applicable). Prior to inspection, 24 hours notice shall be given, and inspections must be made between the hours of 8 am and 4 pm, Monday to Friday.
7) If a certified Footing Plan is required as a condition of the permit, I will cease construction once the footings have been poured and submit the Footing Plan to the Town, and the Town shall determine if the location meets Bylaw requirements.

For information purposes only: To what extent did the Trans-Canada Highway realignment around the Town of Cornwall influence your decision in choosing the location for this proposed development? That is, did it account for 0% of your decision, 100% of your decision, or some percentage in between? _____

Date: _____, 20____

_____
Applicant's Signature

_____
Applicant's Name (Please Print)

+

OFFICE

Supplied:

Corner lot? ☐ Yes ☐ No Is a Footing Plan required? ☐ Yes ☐ No

Maximum lot coverage:_____

Existing lot coverage:_____

Proposed lot coverage:_____

Variance Requested_____ ☐ granted_____ ☐ refused_____**Date**_____

Required Conditions of the Planning Board and/or Council _____

_____

_____

Approval Date: _____ **Building Permit #:** _____

Development Officer _____ _____ (date of issuance)

Site Plan

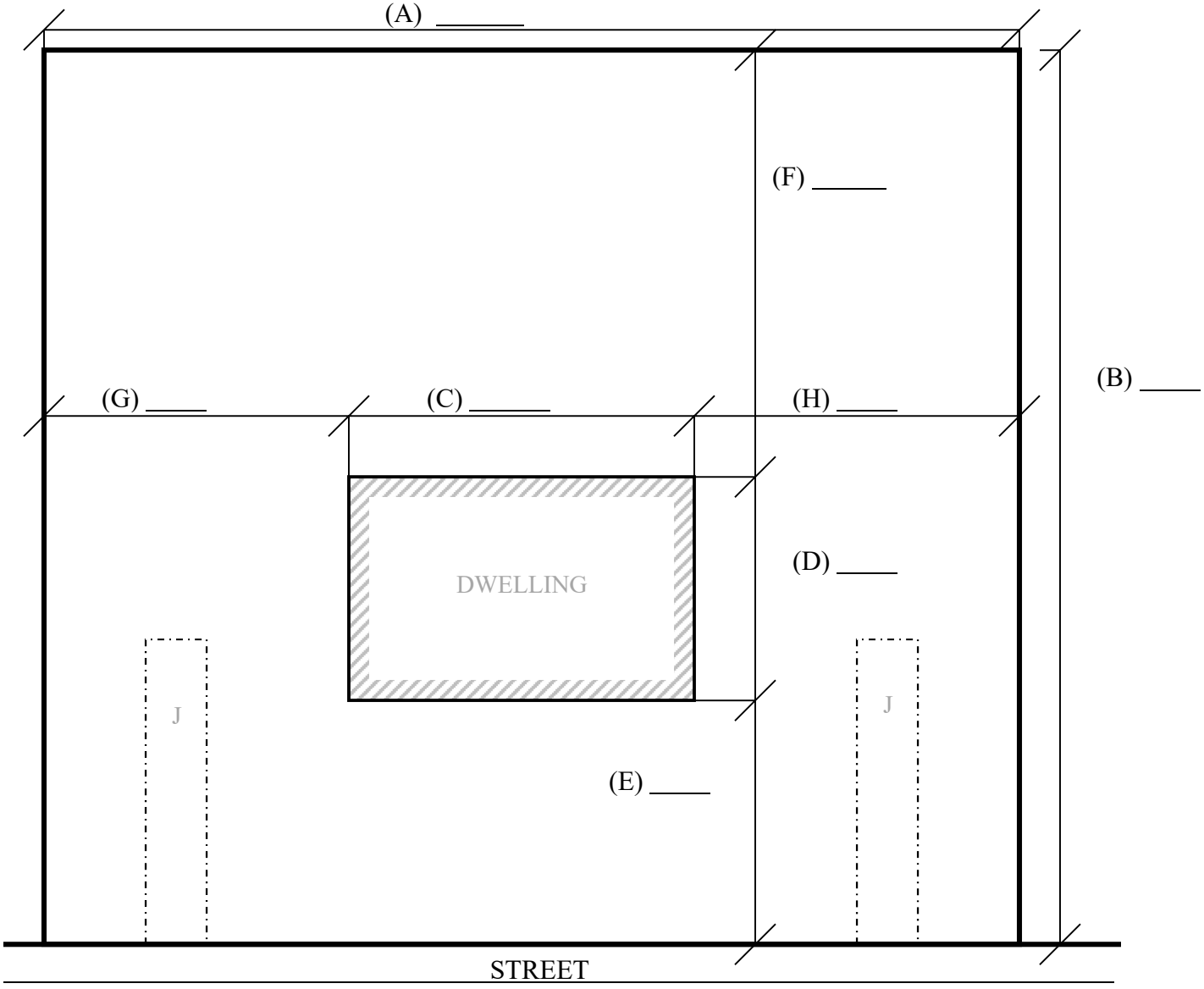

LOT #_____

DIMENSIONS OF LOT (A) _____x (B)_____

DIMENSIONS OF BUILDING (C)_____x (D)_____

DISTANCE FROM FRONT LINE TO BUILDING (E)_____

DISTANCE FROM BACK LINE TO BUILDING (F) _____

DISTANCE FROM SIDE LINE TO BUILDING (G)_____ (H)_____

LOCATION OF DRIVEWAY (J: Select one)

DIMENSIONS OF DECK/PATIO (Sketch in) _____x _____

INDICATE ON SITE PLAN:

LOCATION & DIMENSIONS OF ANY EXISTING BUILDING(S) ON LOT LOCATION & DIMENSIONS OF PROPOSED BUILDING(S) ON LOT

TOWN OF CORNWALL WATER & SEWER UTILITY CORPORATION

39 Lowther Drive, P.O. BOX 430, CORNWALL, PEI C0A 1H0
UTILITY: (902) 566-3234 - TOWN HALL: (902) 566-2354 - FAX: (902) 566-5228

W/S Application #_____ W/S Receipt #_____ Development Permit #_____

APPLICATION FOR SERVICE

- This application must be filled out completely and signed by the customer, developer or the installer (Applicant) before service will be provided. The Applicant agrees to abide by the requirements of the Town of Cornwall Utility Corporation (Utility) and all applicable provincial legislation.
- The contractor must contact the Utility at 902-566-3234 with 24 hour prior notice to commencing construction, and all inspection work must be carried out Monday to Friday between the hours of 8:00am and 4:00pm.
- Costs of extending services or increasing the size of existing services, including in the public right-of-way, shall be the responsibility of the Applicant. Reinstatement of any infrastructure (e.g. streets, sidewalk, storm system, etc.) in providing these services shall be the responsibility of the Applicant and must be competed in a timely manner.
- Underfooting service is not guaranteed by the Utility. Elevations must be verified by the Applicant before construction begins.
- Service will not be provided until the application fee is paid, a provincial plumbing certificate is issued (where one is required) and an inspection of the work is carried out by the Utility before the work is covered up.
- **IT IS NOT PERMITTED TO CONNECT SUMP PUMP/HEAT PUMPS/GEOTHERMAL TO MUNICIPAL SERVICES.**

---

1. **Application is hereby made to the corporation for the following work:**
   Inspection of: □ Water □ Sewer □ Sprinkler □ New □ Repair
2. **Service Classification**:
   □ Single Family Home □ Duplex □ Multi-Unit Residential - Number of Units _____
   □ Semi-Detached □ Commercial □ Other _____
   Street Name and No: _____
   Subdivision: _____ Lot # _____ Property #_____
   Water Service: □ ¾" (19 mm) □ Other _____ Meter Size Required _____
   Sewer Service: □ 4" (100 mm) □ Other _____ Sprinkler Service: Size _____
3. Property Owner's Name: _____ Phone: _____
   Mailing Address: _____
   Service Contractor: _____ Phone: _____
   Plumber: _____ Permit #:_____ Phone:_____
   Fees: _____ P.O. # _____
4. Water & Sewer Bylaw – 4.6: An Inspection fee of $25.00 shall apply for one service to a property and $35.00 shall apply for two services to a property.

_____ _____

Applicant Signature **Date**

Note: If you are submitting an application and are not the registered owner of the property in question, the form below must be completed by the Property Owner and submitted with your application.

AUTHORIZATION FOR *PROPERTY OWNERS AGENT*

_____ (the "Property Owner") hereby confirms that the Property Owner has authorized _____ (the "Applicant") to act as the Property Owner's agent and file a _____ application with the Town of Cornwall in relation to Lot ___, being provincial parcel no._____ (or part thereof), located at Cornwall, Queens County, Province of Prince Edward Island, which parcel of land is presently owned by and registered in the name of the Property Owner.

In the event the Applicant ceases to be so authorized by the Property Owner, the Property Owner shall notify the Town of Cornwall as soon as practical, but no later than 3 business days from the date the Applicant ceases to be so authorized.

Dated this __ day of _____, 20__.

Per: _____

APPLICATION FOR AN ENTRANCE WAY / HIGHWAY ACCESS

Department of Transportation, Infrastructure and Energy

Office Use Only:
$25 Non-Refundable Fee Paid ( )
Staff Initials: _____

Please check (✔) the area applied for:

( ) **Entrance way on an Arterial Highway**
( ) **Entrance way on a Seasonal Highway**
( ) **Extension of existing culvert (3m max.)**
( ) **New Access on all other Provincial highways**
( ) **Re-locate an existing Highway Access**
( ) **New Access on municipal street or approved subdivision**

Note: The allowable use of a parcel of land served by an entrance way (access) to a Provincial Highway is governed by the Roads Act - Highway Access Regulations (HAR's) and the location of an entrance way (access) is subject to the **Minimum Safe Stopping Sight Requirements** imposed by the HAR's.

General Information:

Applicants Name: _____ (First) _____ (Middle) _____ (Last)

Contact Person if different from Applicant: _____

Mailing Address: _____ Postal Code: _____

Daytime Phone #: _____ Cell Phone: _____ E-mail _____

Location of the property:

Property Tax Number: _____ Community: _____ Civic Address: _____

Route No. _____ Road Name: _____ The property is located

on the North _____, South _____, East, _____, West _____, of the highway, _____ Kilometers

North _____, South _____, East _____, West _____ of the intersection with _____ road, street

Entrance way use: Please check (✔)

Existing entrance way use:	single family dwelling ( )	Commercial ( )	Agriculture active ( )
way use:	duplex dwelling ( )	Industrial ( )	Agriculture idle ( )
	multiple dwelling ( )	Institutional ( )	Cottage ( )
	mobile home ( )	Forestry ( )	None ( )

Other: _____

Proposed use: (please describe from list above) _____

I (we) understand that this application is subject to review by the Department of Transportation, Infrastructure and Energy and that no entrance way/access to a highway may be constructed or intensified without approval.

Please see the reverse side before signing. **Date:** _____

_____ **Applicants Signature**

_____ **Applicants Signature**

To be considered, this application must be accompanied by the following:

1. Arterial or Seasonal Highway:

a. A completed application with a $25.00 (non-refundable) application fee. If the application is approved this fee will be applied to the fee associated with the approval/installation of the access (driveway) within the Provincially owned Right-of-way. See below for Fees associated with all entrance way/access/driveway installations within provincially owned right-of-ways.
b. In the case of an application for an expansion of a commercial operation, a scaled detailed floor and site plan illustrating the existing and proposed facility.
c. Copies of the deed for the lot or parcel. Include **Schedule "A".**
d. A record of re-zoning or change of use approval, if applicable.
e. If approved for an Entrance Way, the owner(s) of the parcel will be required to sign an Entrance Way Permit (EWP) which indicates the location of the approved entrance way (access) and the approved use of the parcel of land being accessed. This EWP will be registered in the Registry of Deeds office against the parcel of land being accessed and a registered copy of the EWP will be provided to the owner.
f, If the EWP is being issued for a parcel of land serviced by a "Seasonal Highway" the EWP will also state that the road is a Seasonal Highway, that the road will be maintained in a passable condition between May 1 and October 31 each year, that there will be no school bus service, the allowable use of the property, the driveway location relative to the property boundary, and any other conditions that may apply.

2. For all highways other than arterial and seasonal:

a. A completed application form with a $25.00 (non-refundable) application fee. Similar to above, if access is approved this fee will be applied to total fee associated with the approval/installation of the access. See below for further information of fees.
b. A plan of survey, if applicable.
c. A property map or Geo-Linc map showing the entire property, location of existing and proposed buildings and the intended location of the Entrance Way.

3. Fees associated with all entrance way/access/driveway installations:

a. The basic fee for the installation of an access within a provincially owned right-of-way (ROW) is $1500.00 (taxes included) and would include the installation of a culvert (length and diameter determined by the province based on the approved use of the land) as well as select borrow (shale) as required within the ROW to access the parcel being served. This fee also applies even if it is determined that a culvert is not required but supply of select borrow is still required.
b. The basic fee of $1500.00 shall be reduced to $500.00 (taxes included) if the access to the parcel being served is for agricultural use only, or for a relocation of an existing culvert. There is no charge for relocations for safety reasons .
c. The basic fee of $1500.00 shall be reduced to $750.00 (taxes included) if the access does not require the installation of a culvert and/or select borrow but does involve the removal or cutting of concrete or asphalt curbing.
d. The basic fee of $1500.00 shall be reduced to $100.00 (taxes included) if the access does not require the installation of a culvert and/or select borrow and nor does it require removal or cutting of concrete or asphalt curbing. In this case there is no work required or material supplied by the Province other than it may require a site visit by staff to ensure that sight distance requirements are met.
e The cost (taxes included) for culvert extensions is $75.00 per metre for agricultural accesses and $225.00 per metre for other uses. The maximum length to be approved as a culvert extension is 3 meters. Culvert extensions shall not be used for ditch in-filling purposes. If interested in ditch in-filling please contact Capital Projects Division of Transportation, Infrastructure and Energy at 902-368-5100 and ask to speak to the individual in charge of reviewing ditch in-fill requests.
f. Cost associated to provide gravel or asphalt in all cases noted above are at the owners expense.
g. These fees are subject to change as determined by legislation/regulation/policy of Government.

4. The driveway shall be constructed in accordance with the following sketch and a site plan complete with elevations at road, along driveway and building foundation may be required to ensure compliance:

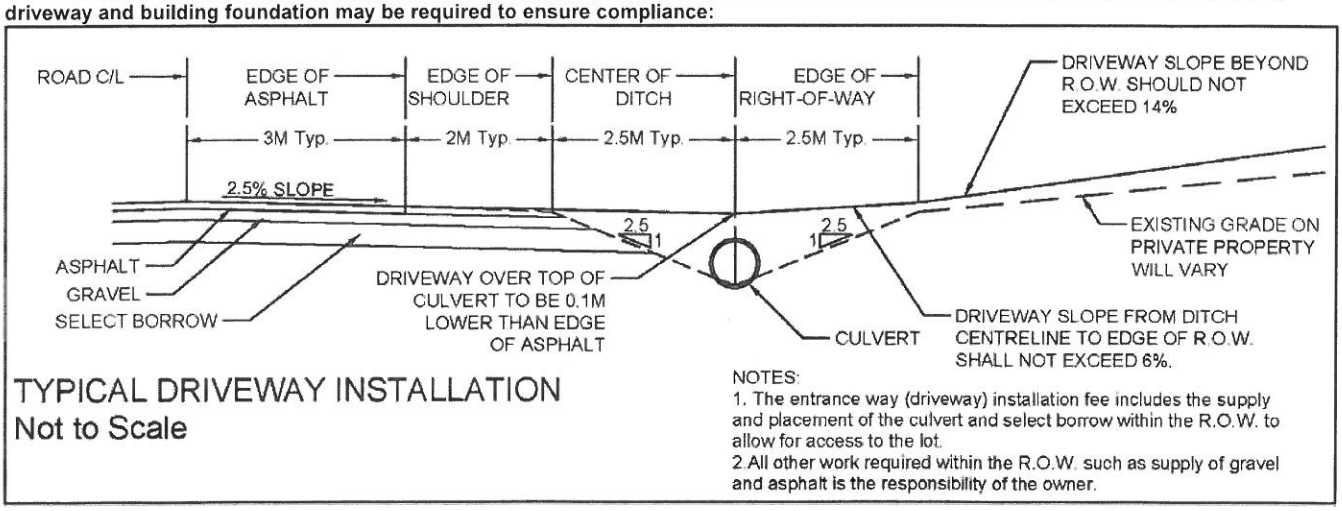

This application will not be processed unless this page is initialled and dated by the applicant(s).

Initials:_____ Date:_____ Revised: March 2019

Building & Development Permit Application

A. Before You Apply

All applicants should read through the application form carefully to determine if they have all of the information on hand to complete it.

If you are applying for a development permit to build a commercial, industrial, institutional, or multi-unit residential structure, please contact a Development Officer with the Land Division before applying.

If you are applying for a building permit that requires professional design or is outside the scope of the National Building Code please contact a Building Official with the Land Division before applying.

B. Application Package Requirements

Before an application package is considered complete and will be accepted for review, it must contain:

- The application form that has all of the questions answered and is signed by the registered owner of the property, or someone authorized to act on their behalf, as well as the applicant.
- A Development Area Map, drawn to scale and including a north arrow, showing:
  - The boundaries of the property involved, including dimensions
  - All roads and right-of-ways on and adjacent to the property
  - The distance from the proposed structure to all property boundaries
  - The location of all existing structures on the property, including exterior dimensions
  - The location of the proposed structure, including exterior dimensions and elevations
  - The distance from the proposed structure to the centre of any roads
  - The distance from the proposed structure to any existing structures
  - The distance from the proposed structure to any watercourse, sand dune, or the top of the bank
  - The distance from the proposed structure to any existing or proposed well and septic systems (tank and field tile)
  - The distance between any well and septic systems
  - The location of any existing and proposed driveways, including the distance from the centre of the driveway to the nearest property boundary

Further requirements specific to Building Permit Applications:

- Foundation, truss and structural framing plans and details
- Front, side and rear elevations
- Floor Plans
- Cross-Sections

C. How to Submit Your Application

Once you have completed the application form, and reviewed it to ensure all questions have been answered, and that all information provided is clear and accurate, deliver your application to Inspection Services, located at 31 Gordon Drive, Charlottetown. Alternatively, you can deliver your application form to one of the Access PEI locations listed below:

- O'Leary - 45 East Dr, O'Leary, PE, C0B-1V0
- Summerside - 120 Heather Moyse Dr, Summerside, PE, C1N-5Y8
- Montague - 41 Wood Islands Rd, Montague, PE, C0A-1R0

Your application will be considered incomplete and will be returned if any of the requirements outlined in section B are missing, unclear or illegible, or if fees have not been paid.

1. Application Type

Building & Development Permit ☐

Development Permit Only ☐

Building Permit Only ☐

Personal information on this form is collected under section 31 (c) of the *Freedom of Information and Protection of Privacy Act* R.S.P.E.I. 1988, c. F-15.01 as it relates directly to and is necessary for the review of your application. If you have any questions about this collection of personal information, you may contact (902) 368-5280 for more information.

Prince Edward Island
CANADA

2. Property Information

Property Tax Number : _____ Community: _____

Civic Address Number: _____ Street Name: _____

Property Depth: _____ Property Width: _____

Property Acreage: _____ Lot Number (if applicable) _____

3. Applicant Information and Mailing Address

Name: _____ (First) _____ (Middle Initial) _____ (Last)

Company Name: _____

Street Address or PO Box: _____

Community: _____

Province: _____

Postal Code: _____

Email: _____

Phone: _____

4. Property Owner Information if Different From Above

Name: _____ (First) _____ (Middle Initial) _____ (Last)

Company Name: _____

Street Address or PO Box: _____

Community: _____

Province: _____

Postal Code: _____

Email: _____

Phone: _____

5. Existing Land Use

a. How is the property currently used? Please check all that apply.

- ☐ Single-unit residential
- ☐ Commercial
- ☐ Agriculture
- ☐ Multi-unit residential
- ☐ Industrial
- ☐ Forestry
- ☐ Rental accommodations
- ☐ Institutional
- ☐ Other

b. Describe the current land use in detail. If the property is used for a livestock operation, include the type of livestock, the number of animals, and whether there is a manure storage facility.

c. Are there existing buildings on the property? ☐ Yes ☐ No

d. If there are existing buildings on the property, please describe the use of each building in detail.

e. What is the physical nature of the land? Please check all that apply.

- ☐ Wooded or treed
- ☐ Pasture
- ☐ Along the coast
- ☐ Low or swampy
- ☐ Hilly
- ☐ Near a waterbody
- ☐ Cultivated
- ☐ Level or flat
- ☐ Other

f. Describe the physical nature in detail.

g. Are any of the following located within one kilometre of the proposed development?

- ☐ Livestock operation
- ☐ Waste disposal site
- ☐ Residential lots
- ☐ Quarry or pit
- ☐ Airport
- ☐ Shellfish processing
- ☐ Sewage treatment facility
- ☐ Cemetery
- ☐ Active wharf

6. Proposal Information

a. What type of development or activity are you proposing? Please check all that apply.

- ☐ New, detached structure
- ☐ Addition to existing structure
- ☐ Relocation of existing structure
- ☐ Changing the use of an existing structure
- ☐ Renovation of an existing structure
- ☐ Demolition of an existing structure

b. What will the proposed development be used for? Please check all that apply.

- ☐ Single-unit residential
- ☐ Multi-unit residential
- ☐ Rental accommodations
- ☐ Commercial
- ☐ Industrial
- ☐ Institutional
- ☐ Agriculture
- ☐ Aquaculture/Fisheries
- ☐ Forestry

c. If you are proposing a residential use, please indicate the number of bedrooms and dwelling units you intend to have in the structure. A dwelling unit is one or more rooms intended to be used as a single housekeeping unit and generally include their own cooking and toilet facilities.

Number of Bedrooms: _____ Number of Dwelling Units: _____

d. Is the proposed structure the main structure on the property? ☐ Yes ☐ No

e. Describe how the proposed structure will be used in detail.

f. What are the dimensions of the structure that you are proposing?

Maximum Width (ft): _____ First Floor Area (ft^2): _____

Maximum Depth (ft): _____ Total Floor Area(ft^2): _____

Number of Stories: _____

g. Provide the minimum distance from your proposed structure to the following.

Front Yard Property Line (ft): _____ Rear Yard Property Line (ft): _____

Left Side Property Line (ft): _____ Right Side Property Line (ft): _____

Shoreline or Top of Bank (ft): _____ Wetland or watercourse (ft): _____

Dunes (ft): _____ Water Well (ft): _____

Septic Tank (ft): _____ Septic Filed Tile (ft): _____

h. What is the estimated dollar value of constructing, plumbing, wiring and finishing your proposed project (excluding costs for land, septic system and landscaping)? $ _____

7. Access and Servicing Information

a. Will the proposal require the creation of a new driveway or the relocation of an existing driveway? ☐ Yes ☐ No

b. Was a soil assessment (perc test) completed on the property? ☐ Yes ☐ No

c. Is there an existing septic system on the property? ☐ Yes ☐ No

d. How will the proposed structure receive sewer services?

☐ New on-site system ☐ Municipal Central Waste Treatment

☐ Existing on –site system ☐ Private Central Waste Treatment

8. Technical Information

a. What type of heating system are you proposing? Please check all that apply.

Oil:	☐ Baseboards	☐ Forced Air	☐ In-Floor
Electric:	☐ Baseboard	☐ Heat Pump	☐ In-Floor
Other: Please Describe			

b. What type of basement are you proposing for the structure?

☐ Full Basement ☐ No Basement

☐ Slab on Grade ☐ Crawlspace

c. What type of foundation are you proposing for the structure?

☐ Standard Concrete ☐ Insulated Concrete Form (ICF) ☐ Wood Posts

Other: Please De-scribe

d. What type of electrical service are you proposing for the structure?

☐ 100 Amp ☐ 200 Amp

Other: Please De-scribe

e. What siding material are you proposing for the structure? _____

f. What roofing material are you proposing for the structure? _____

9. Contracting Information

Please provide the name, email address and phone number for the various individuals that will be involved in your proposed development:

	Name	Email Address	Phone Number
Surveyor:			
Site Assessor:			
Septic Contractor:			
Lawyer:			
Engineer:			
Architect/Designer:			
General Contractor:			
Heating Contractor:			
Electrician:			
Plumber:			

10. Declaration

I, _____ hereby certify that I am

☐ the registered owner of the land proposed for development **OR** ☐ authorized to act on behalf of the registered owner of the land proposed for development

and hereby affirm that all statements contained within this application are complete and true, and I make this declaration conscientiously believing it to be true.

Registered Owner(s) Signature **(MANDATORY)**: _____ Date _____

_____ Date _____

Applicant Signature: _____ Date _____

Please Note: In order for applications to be given adequate consideration, it may be necessary for staff to consult with various departments and agencies. Staff may also carry out a site inspection.

Building & Development Permit Application Sketch

Pursuant to the Planning Act

Note: This sketch is required as part of the Building & Development Permit Application. The information below must be checked, where applicable, and shown to scale in the sketch provided.

- ☐ Show property boundaries and dimensions
- ☐ All structures including exterior dimensions
- ☐ Distance of structures from centre of roads
- ☐ Location of driveway from the centre to the nearest property boundary
- ☐ Location of well, septic tank, and field tile and show distances from structures
- ☐ Show roads
- ☐ Setback from side and rear yard property lines
- ☐ Distance from watercourse, top of bank, and sand dune
- ☐ Natural slope of the land
- ☐ Separation distance between well and septic system

SKETCH

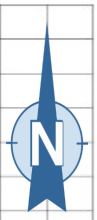

_____ _____

Property Owner's Signature or Applicant **Date**

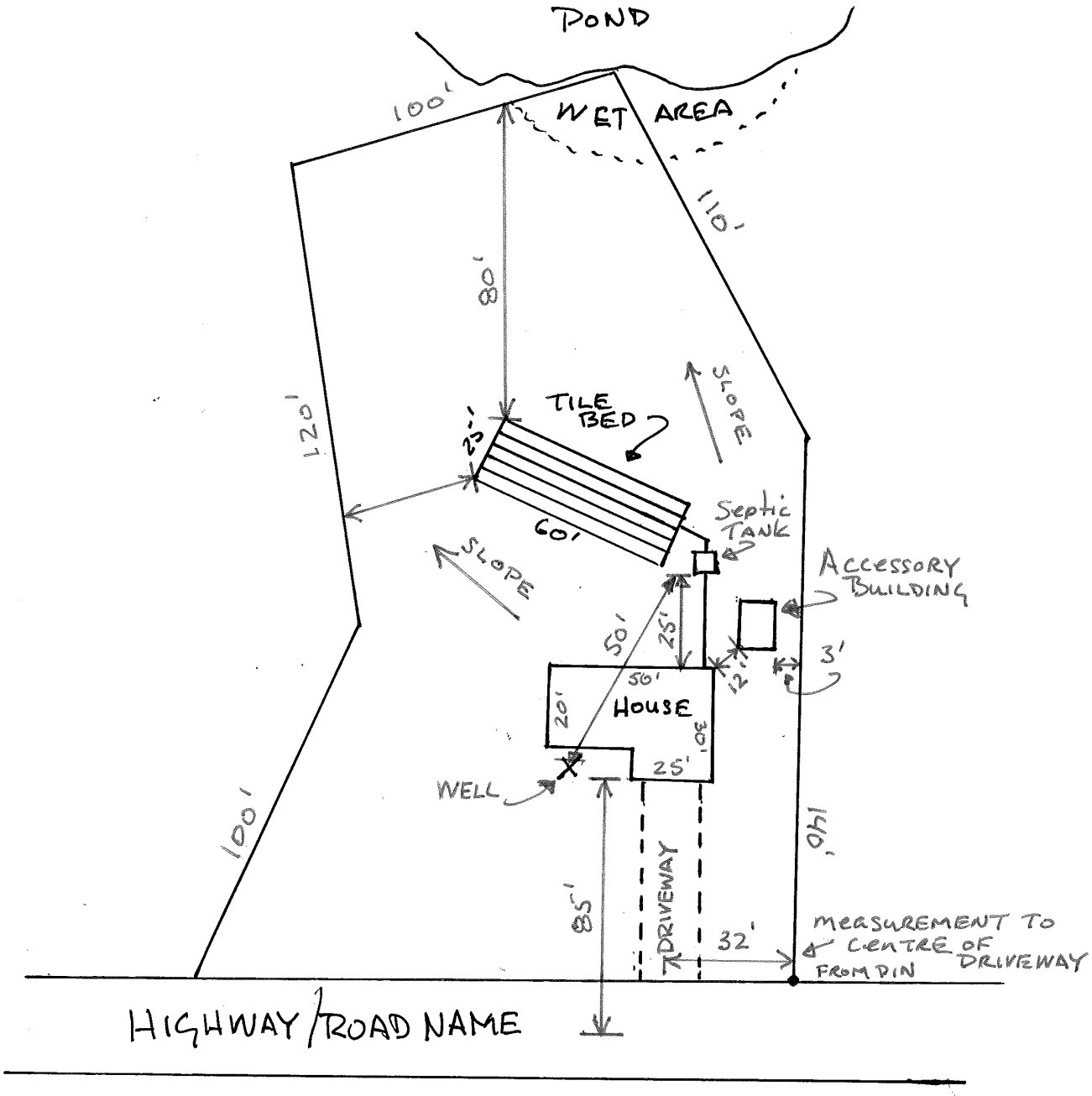
POND
100'
WET AREA
110'
80'
120'
25'
TILE BED
SLOPE
60'
Septic TANK
SLOPE
ACCESSORY BUILDING
50'
25'
12'
3'
50'
20'
HOUSE
30'
25'
WELL
100'
140'
85'
DRIVEWAY
32'
MEASUREMENT TO ℄ CENTRE OF DRIVEWAY FROM PIN
HIGHWAY / ROAD NAME

OFFICE USE ONLY

DEVELOPMENT PERMIT FEES

Residential ($250) ..... = _____

Industrial/Commercial/Institutional/Recreational ($600) .... = _____

Resource ($500) ..... = _____

Other Applicable Fees _____ = _____

RESIDENTIAL BUILDING PERMIT FEES*

New Dwelling - Building Area** up to 139 m^2 ($960) ..... = _____

(Additional $160/each additional 50 m^2)

Conversion of ft^2 to m^2 ($m^2 = ft^2 \div 10.76$)

Occupancy Permit ($25) ..... = _____

BUILDING PERMIT FEES FOR ALL OTHER PROJECTS*

Value of Construction (VOC) greater than $200,000..... = _____

(Permit fee equal to $4.50 per $1000 of the VOC)

Value of Construction (VOC) less than or equal to $200,000.. = _____

Occupancy Permit ($25) ..... = _____

Other Applicable Fees _____ = _____

TOTAL FEES ..... = _____

*Refer to Schedule C of the *Building Codes Act* Regulations

** "**Building Area**" means the greatest horizontal area of a building above grade within the outside surface of the exterior walls or within the outside surface of exterior walls and the centre line of firewalls.

REVIEW FEE ($160) - For review of any project not otherwise listed

OTHER RESIDENTIAL BUILDING PERMIT FEES

Addition of Living Quarters ($640)

Attached Garage (insulated) ($480)

Attached Garage (not insulated) ($320)

Detached Garage (insulated) ($320)

Detached Garage (not insulated) ($160)

Renovation (structural or egress) ($320)

Basement Development/Secondary Suite ($320)

Deck ($160)

Foundation Replacement ($480)

Modular/Manufactured Home ($480)

IF VOC IS LESS THAN OR EQUAL TO $200,000

Principal Building (Building Area over 20m^2/215 ft^2) ($900)

Addition ($720)

Renovation ($540)

Leasehold Improvements ($540)

Accessory Building (insulated) ($540)

Accessory Building (not insulated) ($360)

Barrier-Free Ramp ($360)

Design and Placement Standards

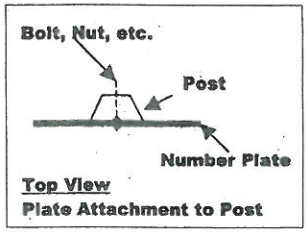

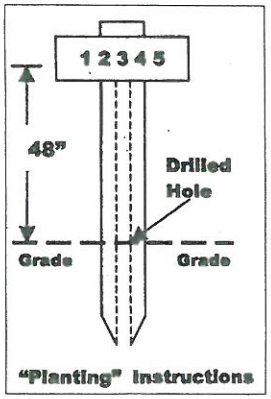

Option A – Display in Urban Areas

If the main building being identified is within 50 feet of your front property line (same as line of electric poles), the number plate can be attached to the main building in such a way that it can be easily seen from the highway end of your lane.



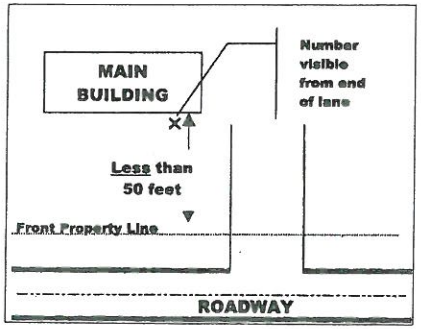

Option B – Preferred Rural Display

If the main building being identified is more than 50 feet from your front property line (same as line of electric poles), place the post and sign combination on the left side of the driveway (as viewed from the road) which serves the building being identified, with numbers facing the road and, no closer to the highway than your front property line.



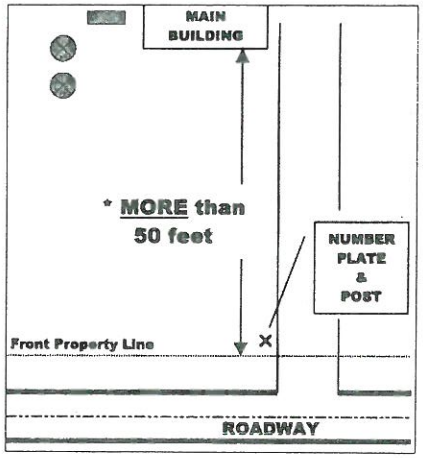

For further information, contact the 911 Administration Office

Tel: (902) 894-0385

Fax: (902) 368-6362

E-mail: *911@gov.pe.ca*

Design: Strategic Marketing and Graphic Design
Photos: Multimedia Services
Printing: Document Publishing Centre
2011

11 911 06-30093

Design, Display and Placement Standards for 911 Civic Number Signs



Prince Edward Island
CANADA
911

Design, Display and Placement Standards for 911 Civic Number Signs

In areas of provincial civic addressing jurisdiction*, civic number sign design, display and placement must conform to strict standards.



These standards are presented in detail in this brochure.

Any new or replacement civic number sign must be manufactured and displayed to meet these standards.

These stipulations were created in the interest of public safety. It is essential that such civic number signs be easily recognizable by both their appearance and consistency of placement in order that emergency service providers can locate their destination.

* *Provincial civic addressing jurisdiction includes all parts of PEI, excluding the following municipalities: Charlottetown, Summerside, Cornwall, Stratford, Souris, Alberton, Montague, Borden-Carleton, O'Leary, Brackley, Georgetown, Tignish, Kensington, Victoria, Kinkora, Wellington and Miscouche.*

Design Standards

Sign Plate

- .049 thickness aluminum
- 1/2" radius corners
- 1/4" holes top and bottom, centered 1/2" in on horizontal centre line of plate
- Finished one side only
- Blue, engineer grade reflective background
- White, engineer grade reflective numbering
- 4" letter size, font is "Highway D"
- Sign sizes are:
  5" x 8" (1-2 digits), 5" x 12" (3 digits),
  5" x 14" (4 digits), 5" x 16" (5 digits)
- See Diagram 1 for details.

Sign Post (Recommended)

- 13 gauge
- Total length will be 5' 6" (1.68 metre)
- Rustproofed steel by phosphate etching
- Black acrylic enamel finish
- Grade marker at 18" (.45 metre) from bottom end
- Pointed at bottom end, so as to be easily driven
- Post to have two holes, both 1/4" diameter at 4" on centre; top hole to be 2" from top of post
- See Diagram 2 for details.

Installation Hardware

- Two, 3/16" x 1 1/4", zinc plated, round, slotted head, stove bolts
- Two, zinc plated washers, with 3/16" hole
- Two, zinc plated lock washers, with 3/16" hole
- Two, zinc plated hex nuts to fit above bolts
- Packaged in reclosable, poly bag
- See Diagram 3 for examples.

Sign Plate

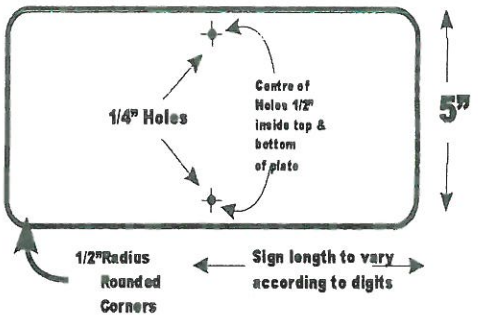

Diagram 1

Sign Post

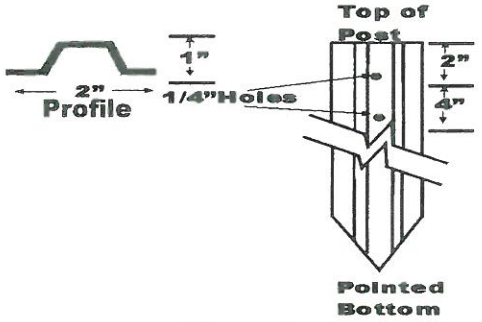

Diagram 2

Installation Hardware

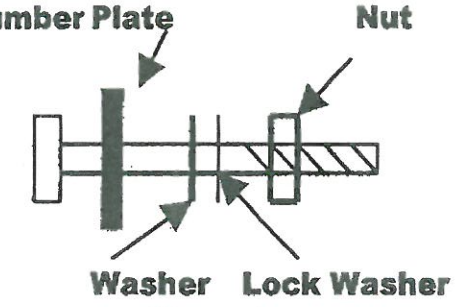

Diagram 3

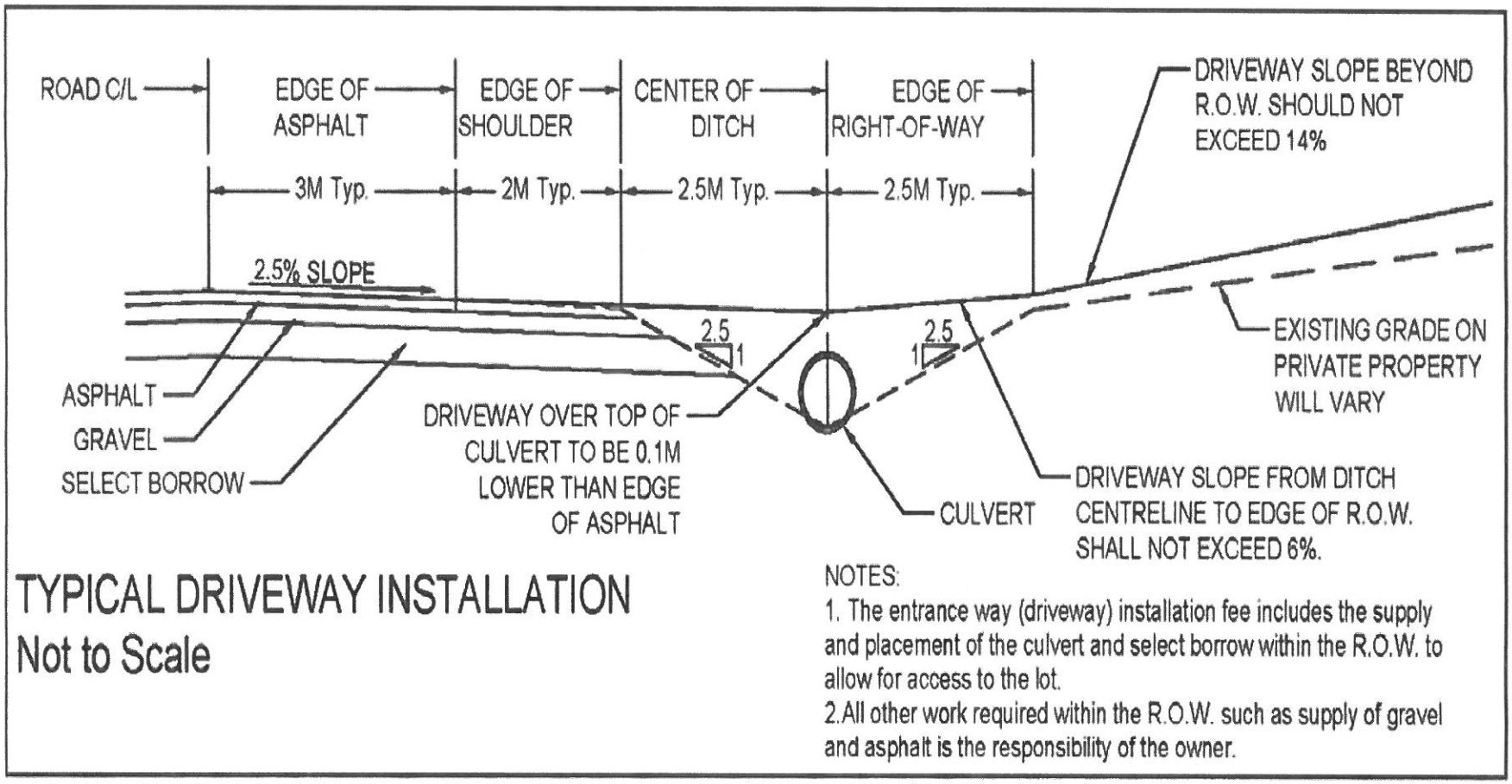

PEI Dept of Transportation, Infrastructure and Energy requires that the driveway shall be constructed in accordance with the following sketch and a site plan complete with elevations at road, along driveway and building foundation may be required to ensure compliance:

Construction Program:

To be eligible for the New Home Construction Program your application must be submitted ***before or within 30 days of receiving your building permit.*** You can start the process by contacting one of our efficiency partners:

HomeSol Building Solutions
1-855-489-5305
atlantic@homesol.ca • www.homesol.ca

Sustainable Housing
1-877-722-2842
bookings@sustainablehousing.ca
www.sustainablehousing.ca

Next Steps:

Our efficiency partner will complete your initial assessment and evaluate your building plans. A Certified Energy Advisor will be assigned to you or your builder and will make recommendations to incorporate energy efficiency technologies into your build.

Complete the construction and have your Certified Energy Advisor conduct a follow up Energy Assessment within 12 months of your application approval date.

Either the homeowner or builder may register the home. The rebate will go to the homeowner, unless it has been assigned to the builder by the homeowner.

Energy Efficient Homes:

Cost less to operate!

An energy efficient home requires less energy to heat (or cool) and reduces your monthly utility bills. Having a comprehensive plans evaluation done before you build gives you the information necessary to create a roadmap to an energy efficient home. This allows you to use the most cost effective options to reduce your energy consumption and minimize your construction costs.

Are more comfortable!

An energy efficient home has fewer drafts and temperature fluctuations and has improved indoor air quality. This means your house is more comfortable and enjoyable to live in.

Have a lower environmental impact!

Reducing the amount of energy used to heat and operate your home means reductions in greenhouse gas and pollutant emissions.

For additional program information, please contact **efficiencyPEI**:

1-877-734-6336

efficiencyPEI@gov.pe.ca

efficiencyPEI

efficiencyPEI

NEW HOME CONSTRUCTION

Financial assistance for plans evaluation and rebates for the construction of energy efficient homes

Toll free: 1-877-734-6336

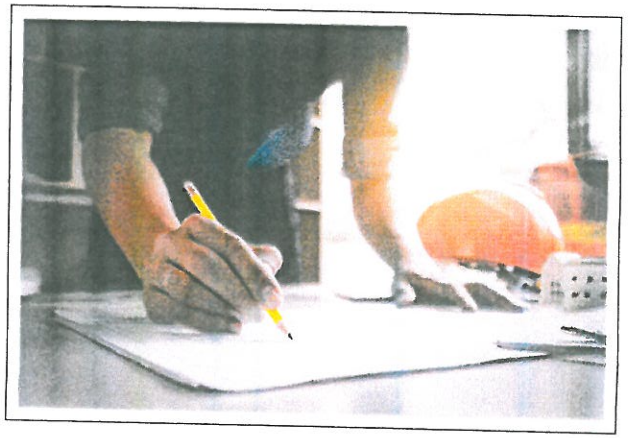

Prince Edward Island
CANADA

2018 ENERGY STAR HIGH EFFICIENCY HAUTE EFFICACITÉ Advocate of the Year

We want to help make your new home *more energy efficient* and *comfortable!*

Here's how:

1. A certified Energy Advisor will review your building plans **before you build**.
2. You will receive customized recommendations to improve the energy efficiency of your design, and work with your builder to implement them.
3. Depending on the efficiency of your new home, you could receive up to $5,000 in rebates.
4. Your home will be assigned an EnerGuide rating that tells you (and future buyers) that your home is comfortable, efficient, and saves money!



How much does it cost?

efficiencyPEI automatically subsidizes more than 80% of the cost of the assessment so it only costs you $99 + HST.

Rebates for energy efficient homes

After having your plans reviewed and building your home, a follow-up assessment will be conducted to determine its efficiency. You will be eligible for two tiers of rebates depending on the efficiency standard you achieve. You may pursue certification through ENERGY STAR® for New Homes or R2000, or alternatively, have your home rated through the EnerGuide Rating System.

For homes built that are certified to meet:

1 - ENERGY STAR for New Homes **or** EnerGuide rating of 20% better than the 2015 National Building Code

A rebate of $2000

2 – R2000 or EnerGuide rating of 50% better than the 2015 National Building Code

A rebate of $5000

The rebate can be paid to the owner or can be paid directly to the contractor.



What is an R-2000 home?

R-2000 is simply a better home. R-2000-certified new homes are best-in-class energy-efficient homes that include high levels of insulation, clean air features and measures to help protect the environment. This translates into energy savings, increased comfort, and a healthier environment for the homeowner.

Every R-2000 home is built to the stringent R-2000 Standard developed by Natural Resources Canada (NRCan) in coordination with key industry stakeholders.

What is an ENERGY STAR home?

Each ENERGY STAR certified home will have some common features, as well as features that may differ.

Common features:

ENERGY STAR certified homes have common features, such as energy-efficient windows, an HRV to recapture lost heat and provide outdoor air, and 400 kwh/year of electrical savings which are typically obtained through ENERGY STAR certified lighting or appliances. In addition, ENERGY STAR certified homes must meet certain thresholds for airtightness.

Flexible features:

ENERGY STAR certified homes also have a number of elements that will differ from home to home, such as level of insulation, efficiency of the water heater, and extent of air tightness. The upgrades chosen for each home will depend on the builder's design and construction choices. This means that to some extent, each home is unique in how it was constructed, and in the energy efficiency elements used by the builder to meet the ENERGY STAR Standard